Artemide

La Petite

design
A. Quaglio
M. Simonelli

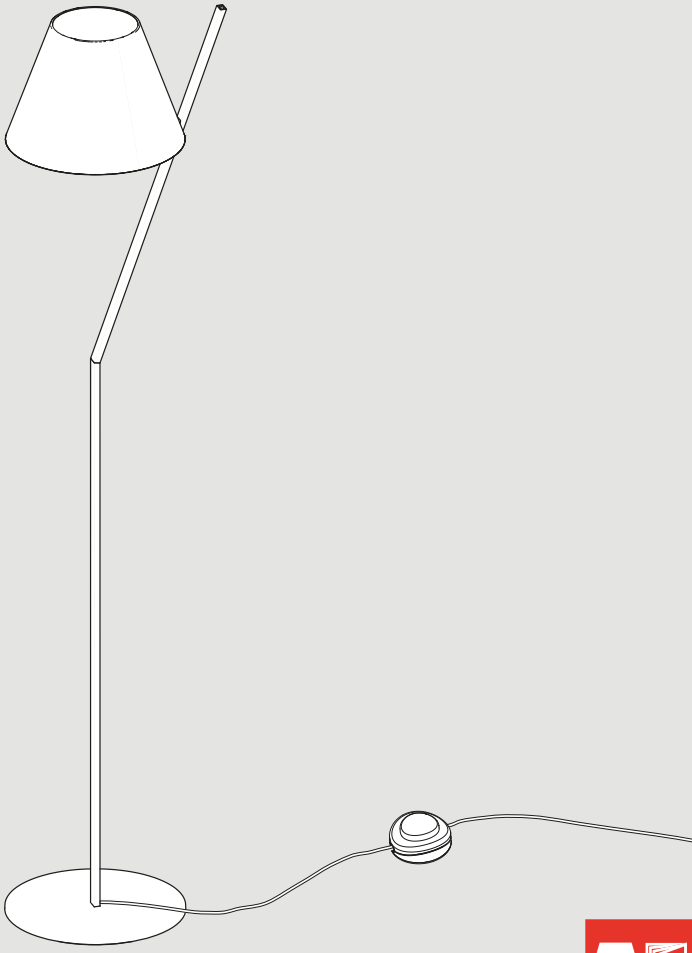

i

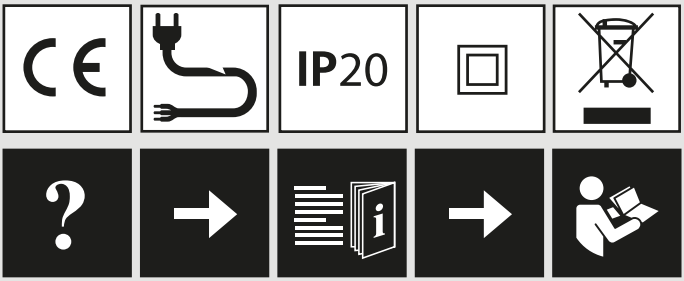

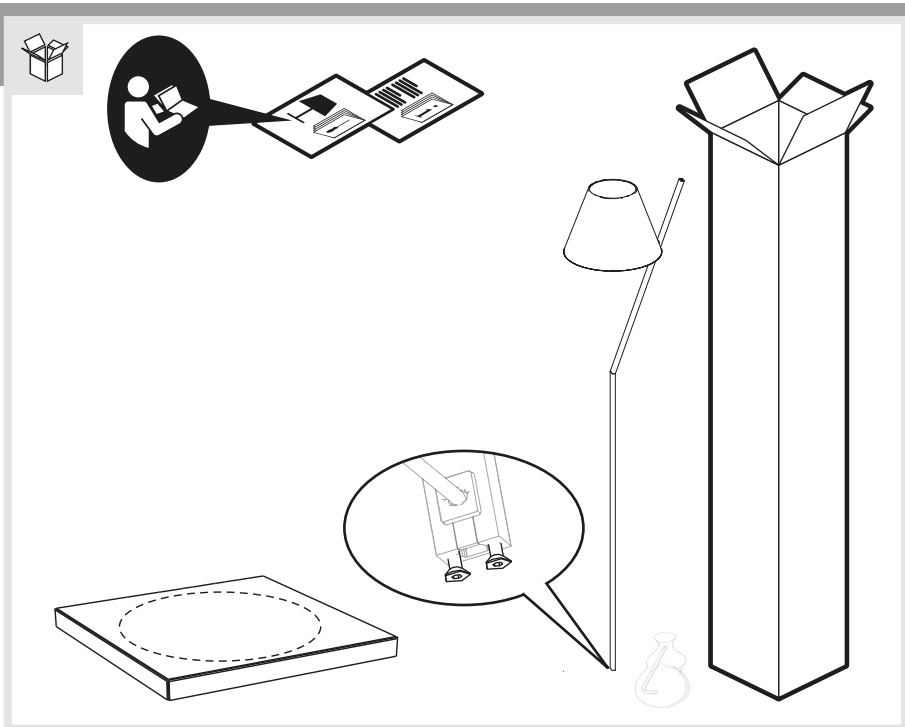

1

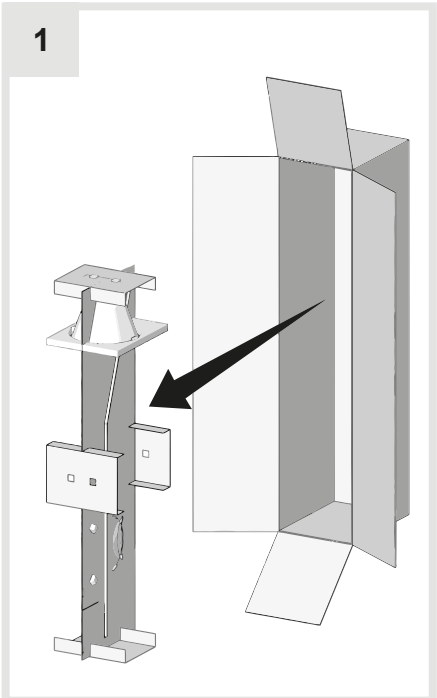

2

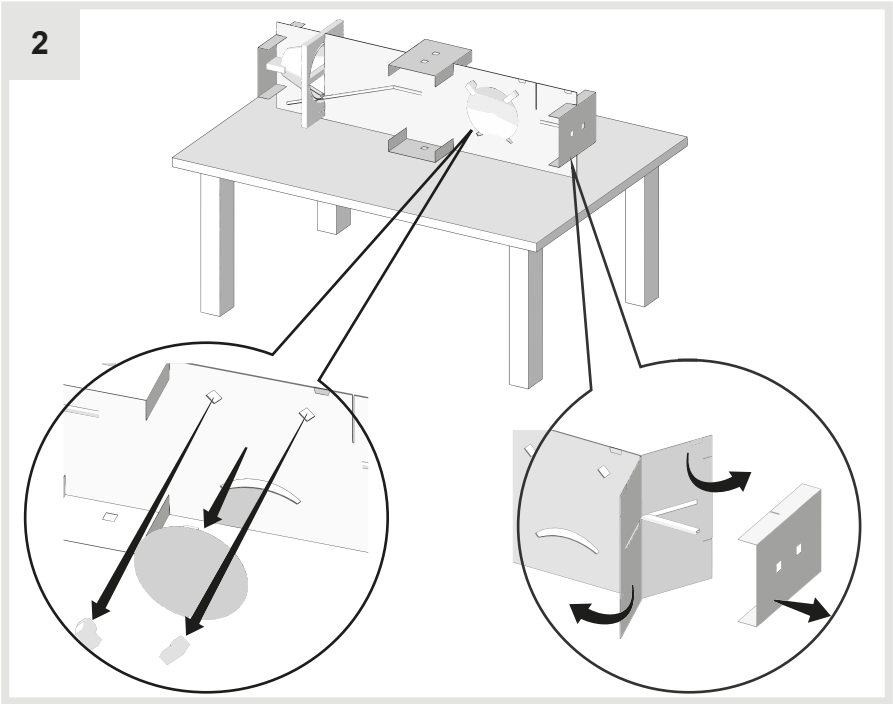

3

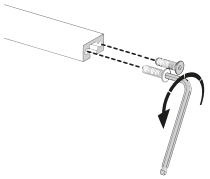

4

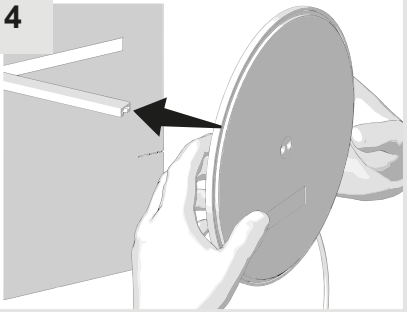

5

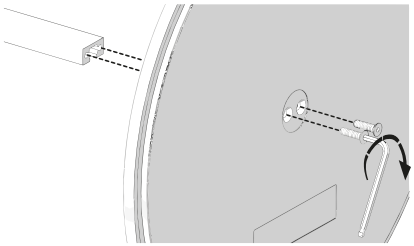

6

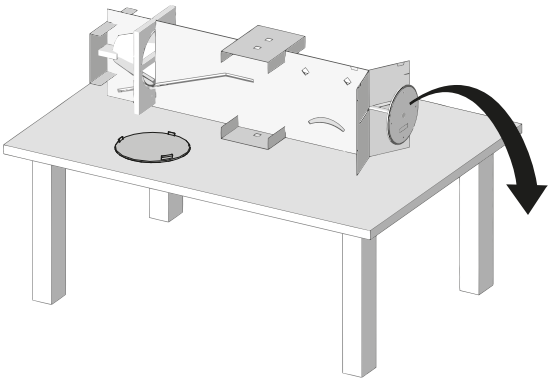

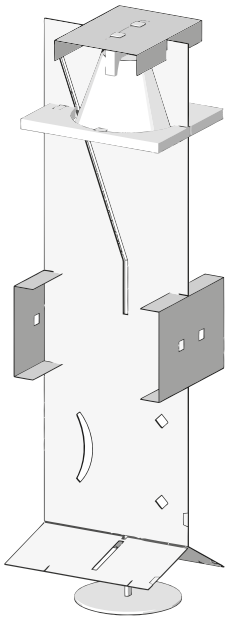

7

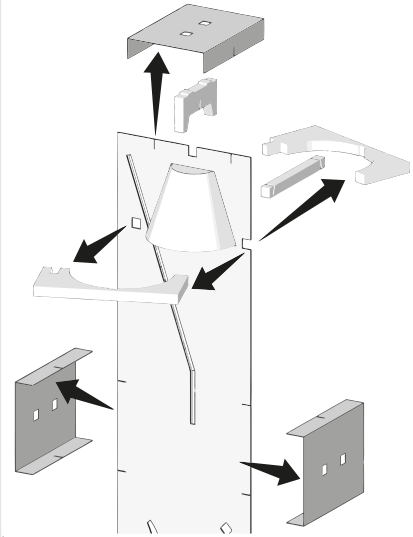

8

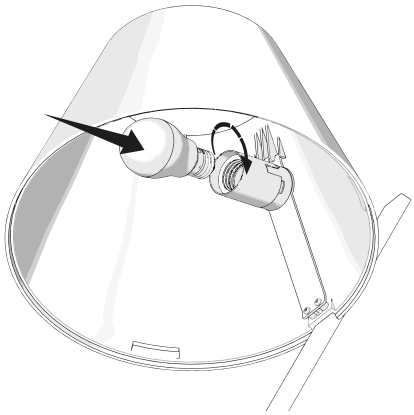

9

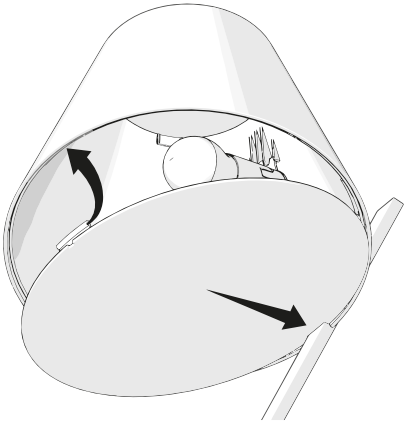

10

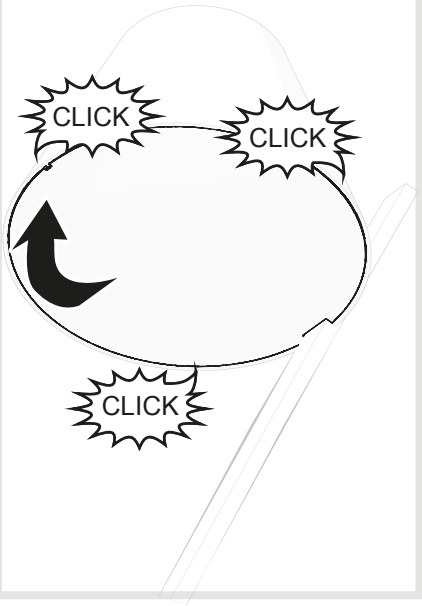

11

12

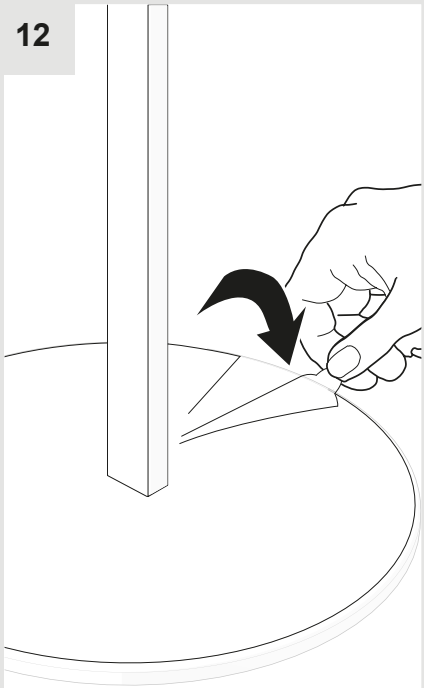

13

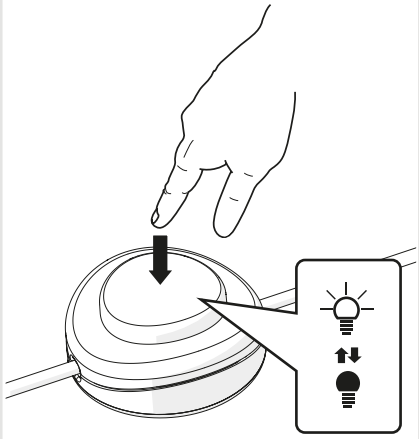

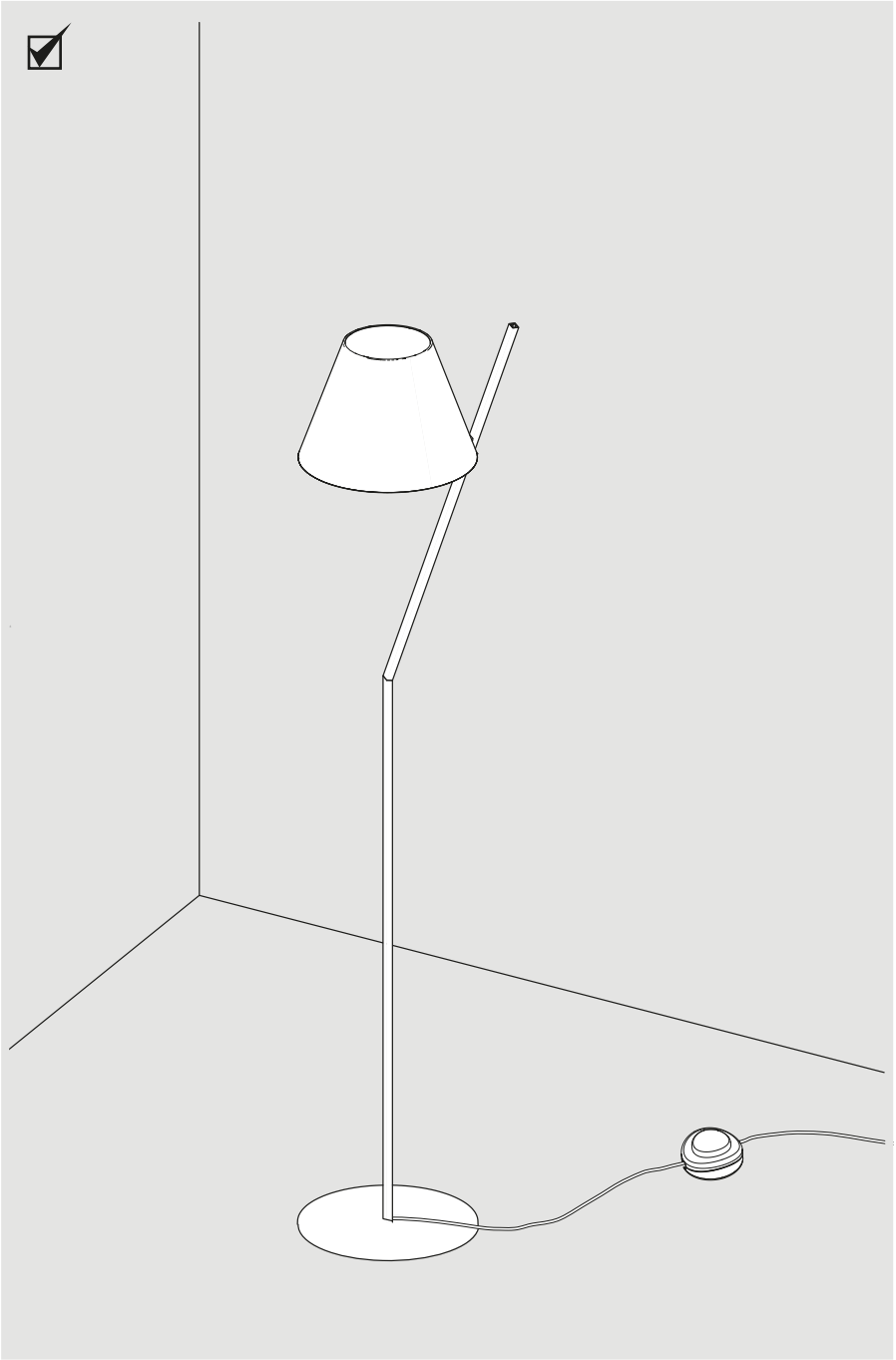

i

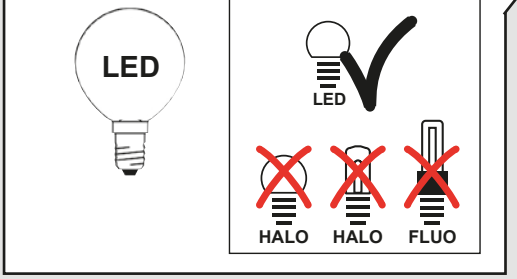

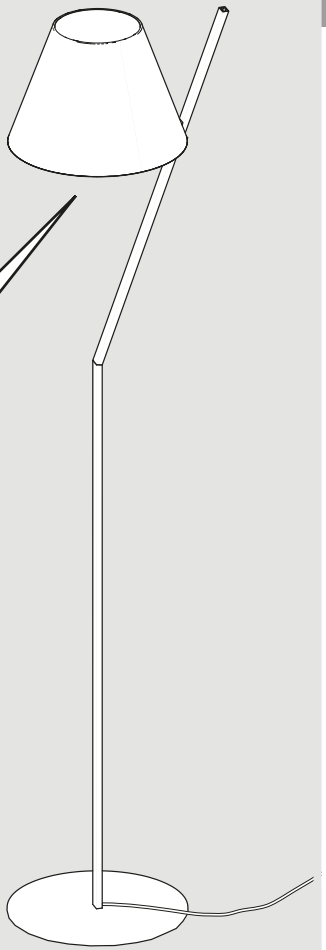

for USA/CANADA only

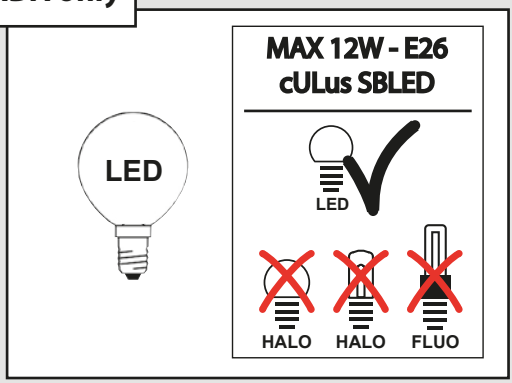

1

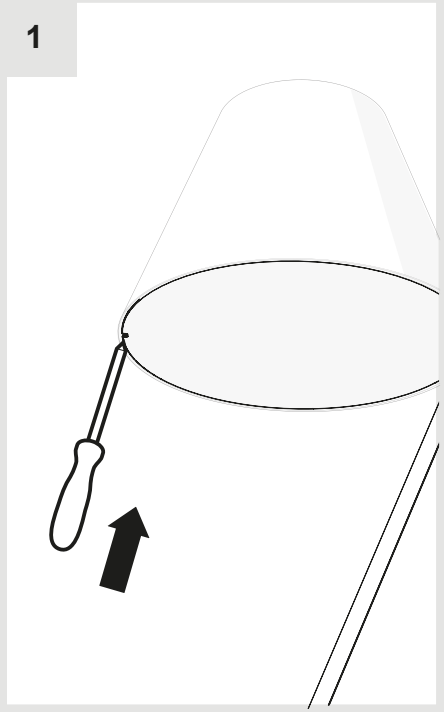

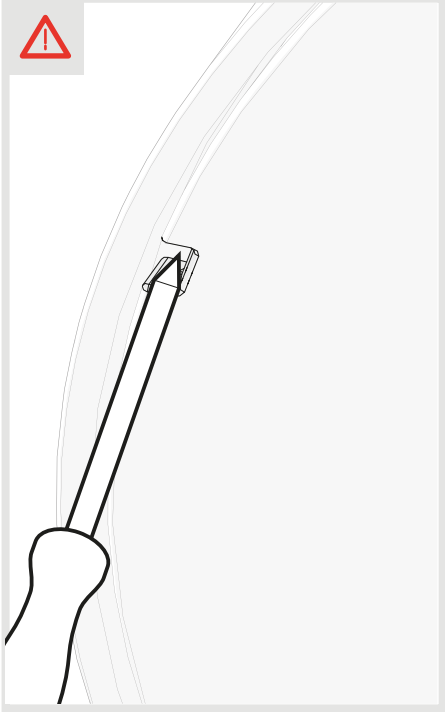

2

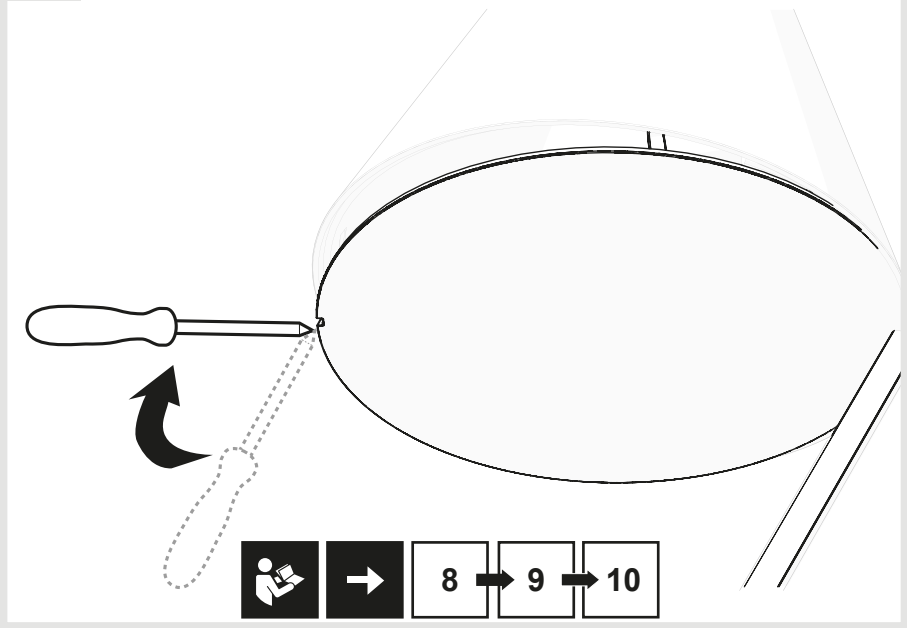

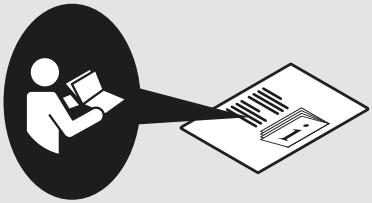

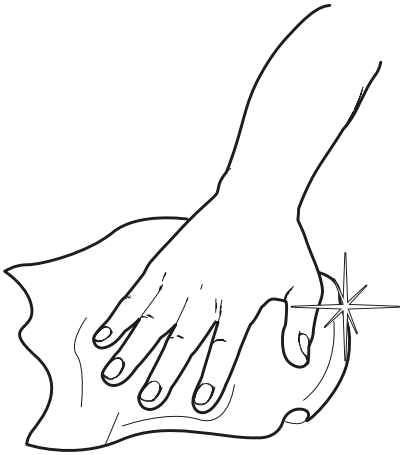

1

Artemide®

Artemide

via Bergamo, 18
20006 Pregnana M.se (MI)
ITALIA

tel. +39 02 935 181
fax +39 02 935 90 254
fax +39 02 935 90 496

www.artemide.com

VAT IT00846890150

Artemide Inc.

250 Karin Lane
Hicksville, NY 11801

Tel. 631 694 9292
Toll Free 1-877-Art-9111
Fax 631 694 9275

www.artemide.net

Artemide Ltée/Ltd.

11105 rue Renaude Lapointe
Montréal, Québec H1J 2T4

Tel. 514 323 6537
Toll Free 888 777 2783
Fax 514 323 8864

www.artemide.net

cod. Y513000659A