Vea
Foster +
Partners
Industrial
Design
Artemide®

# Authors

**Foster + Partners Industrial Design**

Foster + Partners is an international studio for architecture, engineering and design, led by Founder and Chairman Norman Foster and a Partnership Board. Founded in 1967, the practice is characterised by its integrated approach to design, bringing together the depth of resources required to take on some of the most complex projects in the world. They have always had a strong interest in the making of things as an integral part of the design process, rooted in what they believe is a duty to design well and responsibly, whether that is at the scale of an airport or a door handle.

The practice has never drawn a distinction between architecture and industrial design. The point of contact, the thing that you touch, is as important as the broader vision. The industrial design team established in 1980, has developed a wide range of products from door handles to wind turbines; from a fountain pen to the cabin of an executive jet; from a tap to the fit-out of an ocean yacht. Frequently, products are designed in response to a particular project, but they also work directly with clients on product commissions or with companies to develop new products for commercial manufacture.

# Vea

## Foster + Partners Industrial Design 2024

Vea is a versatile lighting family designed to provide a coherent lighting language across different applications.

Vea was first developed as a floor-standing luminaire, conceived as the original expression of the family. From this initial design, the collection has evolved into a complete lighting system with dedicated indoor and outdoor versions, extending the same design language across different environments.

The evolution of the family reflects the iterative design approach of Foster + Partners, where each new version is developed through a process of continuous refinement, preserving the essential character of the original concept while responding to different functional and architectural requirements.

PATENT OF INVENTION

For further information on Vea visit artemide.com

"Vea explored the themes of poise and balance.
Here, the concept has been translated into a light fixture capable of providing a wide pool of light from above that can be adjusted and lowered to create a more intimate lighting effect."

Mike Holland, Foster+Partners Industrial Design

# Vea

Vea floor emerges as a dynamic presence in space, defined by a balanced movement system that allows the body to incline up to approximately 30°. A counterweight positioned at the end stabilizes the structure, while the feet slide along the stem, accompanying its change of position and shaping new lighting postures.

The head, free to orient itself in space, integrates a dual adjustment: a vertical movement up to approximately 130° and a lateral rotation achieved through the twisting of the upper part of the body, allowing precise modulation of the light emission and continuous adaptation to different environments and needs.

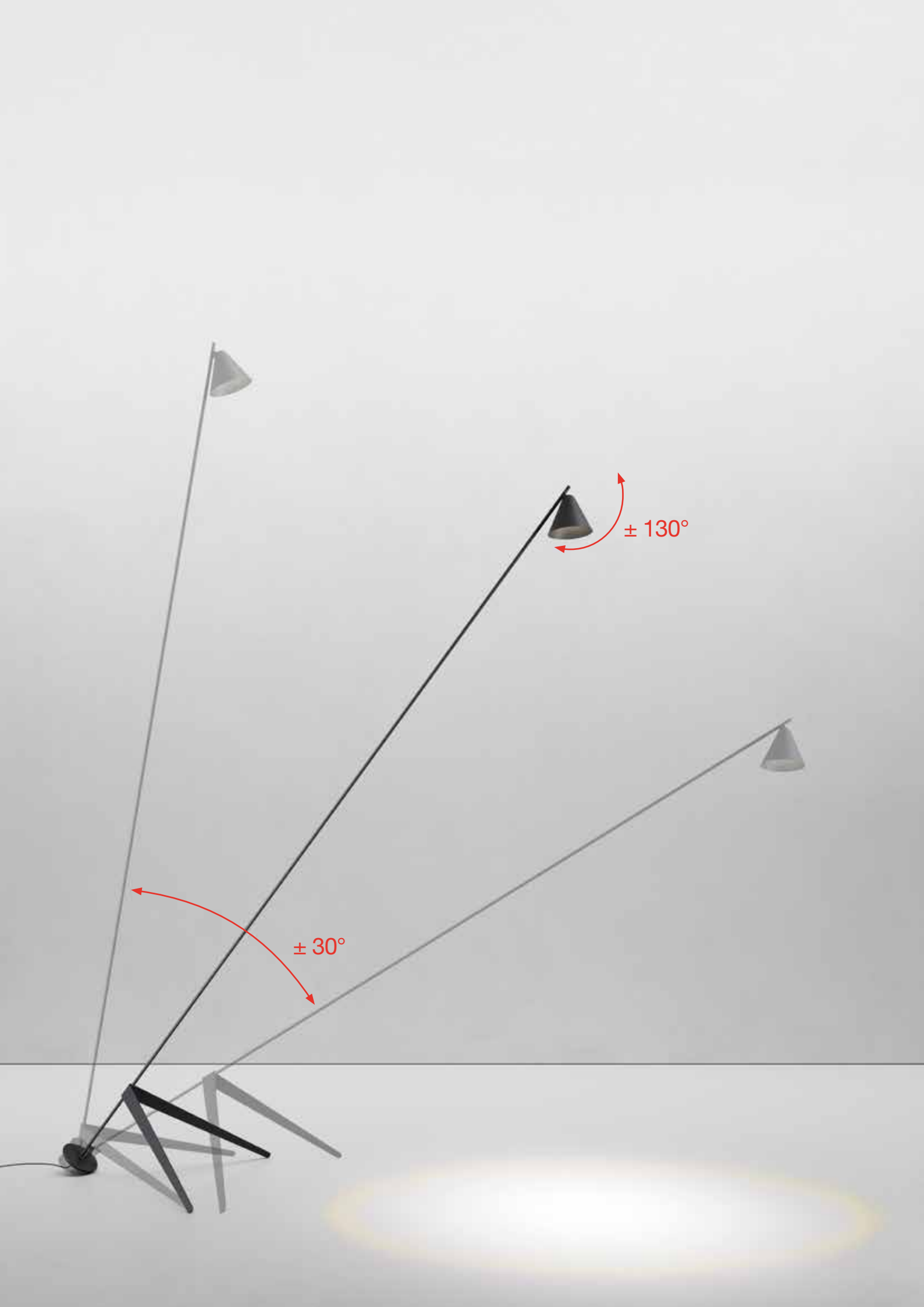
± 130°
± 30°

# Reverse Fresnel Lens

## Patented optical design

The Focus and Ambience versions for Vea Indoor and Vea In/out share the same Fresnel lens geometry, featuring optical micro-grooves oriented toward the light source and perfectly flat output surface.

Geometry designed to protect the optical element from dust and atmospheric agents, preserving lighting performance and emission quality over time.

The Ambience version integrates an additional additive surface layer on top of the lens creating a controlled micro-optical texture directly on the Fresnel lens surface (rather than simply generating a frosted appearance of etching approach), while improving robustness against scratches, thus granting a long term optical solution.

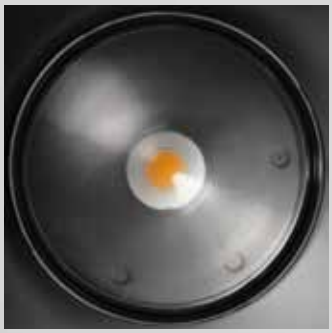

Vea Focus reverse fresnel lens.

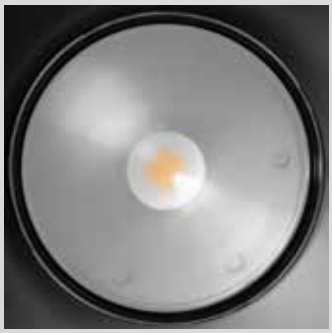

Vea Ambience reverse fresnel lens.

**High performances**

Perfect light beam control

No glaring

High efficiency

High uniformity

# Vea Focus

## Defined Light Geometry

Vea Focus projected a precisely defined circular light characterized by a clean and sharp edge ensuring expressive and accurate illumination. This distinctive quality is an integral part of the lamp's visual language, creating a clear boundary between light and shadow that enhances its graphic expression.

In line with the Foster + Partners Industrial Design concept, the transition between light and shadow reveals a subtle chromatic halo effect, enhancing the natural perception of the edge.

The result is a refined and architectural lighting effect, bringing clarity, elegance, and a strong visual presence to the illuminated space.

# Vea Ambience

## Soft Light Geometry

Vea Ambience creates a soft, diffused pool of light on the floor, defined by a gentle transition rather than a sharp edge. This quality create a seamless dialogue between light and shadow that enhances the perception of comfort and atmosphere.

The gradual fade of light creates a natural and harmonious effect, allowing the illuminated area to blend effortlessly into its surroundings.

Beyond its atmospheric character, Vea Ambience delivers outstanding lighting performance. Its high-quality, uniform beam provides excellent visual comfort and faithful colour rendering, making it ideal for reading, illuminating a dining table, or enhancing living areas and lounge settings. The result is functional, pleasant light that supports everyday activities while creating a warm and inviting environment.

The result is a warm, architectural lighting experience that brings softness, balance, and a quiet visual presence to the space, creating an inviting and relaxing ambience with understated elegance.

# Vea Indoor

Vea is a floor lamp that embodies a light, minimalist, and elegant design that plays with the balance of its base. It creates adjustable positions, allowing you to raise or lower the light to various heights, illuminating areas of different sizes with two different light performances: Focus and Ambience. The head also rotates on the stem's axis and tilts to direct the light where it is needed.

The V-shaped base cradles the stem, allowing it to incline from a vertical position. This is achieved through a clever play of balances and support, seemingly simple in appearance and use, yet complex in the design definition to achieve the perfect equilibrium.

Colours:
- ● Black grey
- ● Platinum grey
- ○ Pure white

# Vea Indoor

Designed for interior environments, Vea Indoor stands 2,4m high and is proportioned to integrate seamlessly into residential, hospitality and workplace settings. Its compact scale makes it ideal for creating a comfortable and refined lighting presence indoors.

IP20

**Colours:**

- ● Black grey
- ● Platinum grey
- ○ Pure white

**Optics:**

Vea focus

Vea ambience

# Vea In/Out

Designed for both indoor and outdoor applications, Vea In/Out stands **3,8m** high, offering a more architectural presence and an increased luminous distribution range.
Its taller proportions make it particularly suitable for terraces, courtyards and gardens.

IP65

Colours:

- Black grey

Optics:

Vea focus

Vea ambience

# Vea In/Out

Colours:
● Black grey

A.

# Vea Suspension

Vea suspension features a simple conical form that enhances its perceptual richness.
With a dim to warm technology it creates an even warmer and more inviting atmosphere as the intensity is adjusted.
The recessed diffusing surface is designed to ensure comfortable light emission.
Colour choices play a key role in defining Vea suspension: the exterior shade is paired with a warm-toned interior, softening the light output and ensuring Vea retains its presence even when switched off.
A versatile solution bridging public and private spaces, with three different dimensions to be used alone or combined in a landscape of elegant elements.

Colours:
- Black grey
- Platinum grey
- Pure white

# Vea Bollard

From Vea's iconic head emerges a versatile family of lights designed to illuminate outdoor spaces in a variety of settings.

The conical head also extends to two bollard versions of different heights, providing uniform illumination for green spaces and pathways.

Colours:

- Black grey
- Black green

# Vea

CRI=90

**Materials:**

Steel

**Total power**: 12,5W

**Dimmable push switch length:**

Vea Indoor 3500 mm

Vea In/Out 6000 mm

**Vea Indoor:**

● Black grey

● Platinum grey

○ Pure white

IP20

CCT: 2700k / 3000K

**Vea In/Out:**

● Black grey

IP65

CCT: 3000K

Vea Indoor

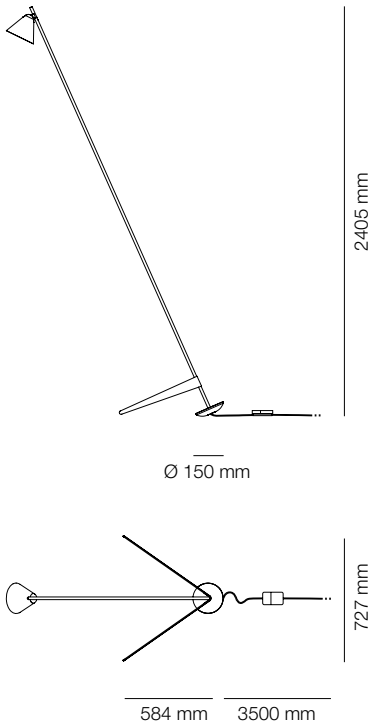


Vea In/Out

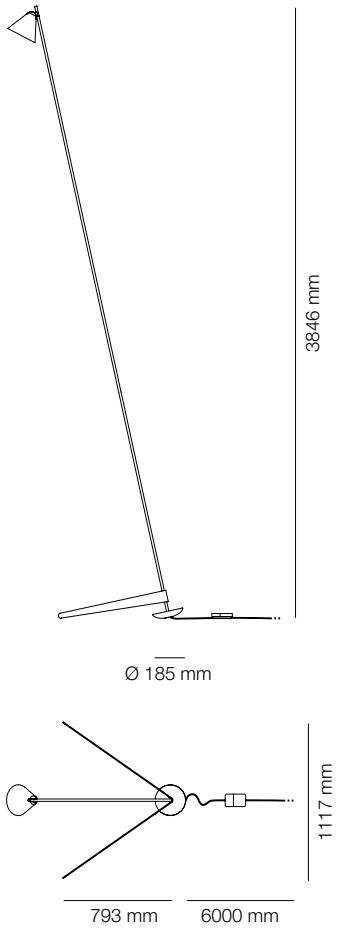

# Vea suspension

CRI=90
IP20
CCT: 3000K
Dim to warm:
1800K-3000K
Materials: Steel

Colours:
● Black grey
● Platinum grey
○ Pure white
Internal surface:
● China clady yellow

Vea Suspension 19:
Total power 3000K: 9W
Total power DW: 7,5W
Vea Suspension 55:
Total power 3000K: 23W
Total power DW: 18,5W

Vea Suspension 89:
Total power 3000K: 33W
Total power DW: 44W

Vea Suspension 19

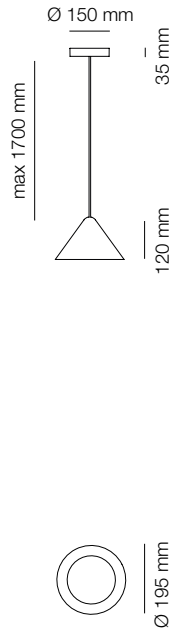


Vea Suspension 55

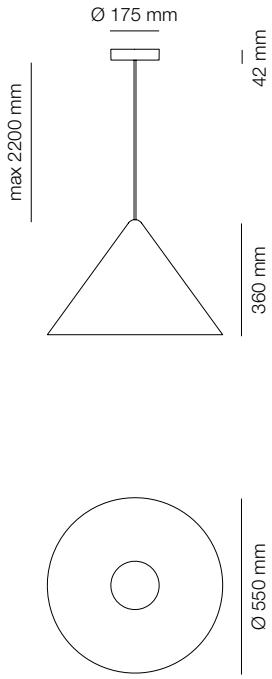


Vea Suspension 89

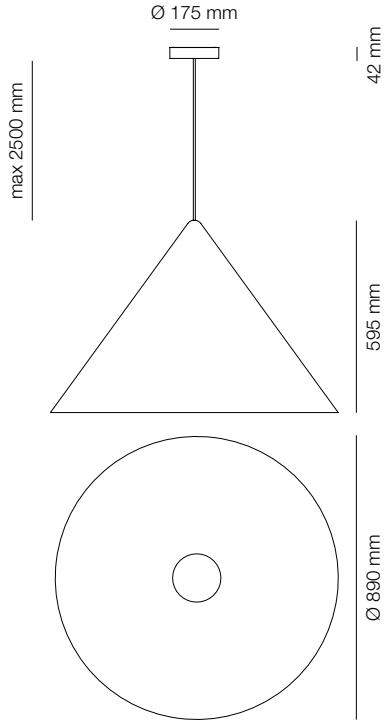

# Vea Bollard

IP65
CRI=90

CCT: 3000K
Total power: 9W

Materials:
Steel
Colour:
- Black grey
- Black green

Vea Bollard 45

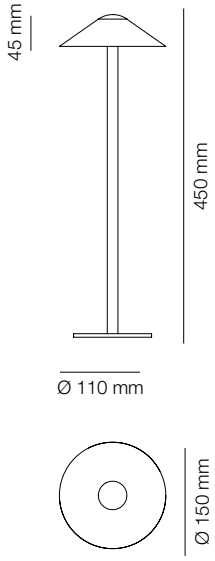


Vea Bollard 90

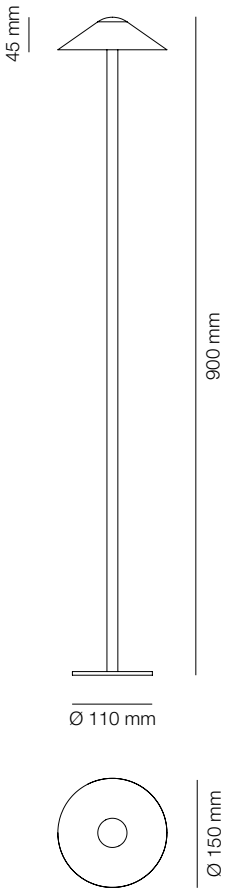

## VEA

| Vea Indoor | | | Dimmable PUSH* |
|---|---|---|---|
| | CCT | Colours | Code |
| Vea Focus | 2700K | Black grey ● | 1001W30A |
| | | Platinum grey ◉ | 1001W10A |
| | | Pure white ○ | 1001W20A |
| | 3000K | Black grey ● | 1001030A |
| | | Platinum grey ◉ | 1001010A |
| | | Pure white ○ | 1001020A |
| Vea Ambience | 2700K | Black grey ● | 1001W40A |
| | | Platinum grey ◉ | 1001W60A |
| | | Pure white ○ | 1001W50A |
| | 3000K | Black grey ● | 1001040A |
| | | Platinum grey ◉ | 1001060A |
| | | Pure white ○ | 1001050A |

| Vea In/Out | | | Undimmable PLUG | Undimmable NO PLUG |
|---|---|---|---|---|
| | CCT | Colour | Code | Code |
| Vea Focus | 3000K | Black grey ● | T077530 | T077550 |
| Vea Ambience | 3000K | Black grey ● | T077540 | T077560 |

* The dimmable push switch is located along the cable.

## VEA SUSPENSION

| | | | DALI / PUSH | PUSH / APP |
|---|---|---|---|---|
| | CCT | Colours | Code | Code |
| Vea Suspension 19 | 1800-3000K | Black grey ● | 2312D30A | |
| | | Platinum grey ◉ | 2312D10A | |
| | | Pure white ○ | 2312D20A | |
| Vea Suspension 55 | 1800-3000K | Black grey ● | 2311D30A | 2311D30APP |
| | | Platinum grey ◉ | 2311D10A | 2311D10APP |
| | | Pure white ○ | 2311D20A | 2311D20APP |
| Vea Suspension 89 | 1800-3000K | Black grey ● | 2310D30A | 2310D30APP |
| | | Platinum grey ◉ | 2310D10A | 2310D10APP |
| | | Pure white ○ | 2310D20A | 2310D20APP |

## VEA BOLLARD

| | | | |
|---|---|---|---|
| | CCT | Colours | Code |
| Vea Bollard 45 | 3000K | Black grey ● | T077630 |
| | | Black green ◉ | T077670 |
| Vea Bollard 90 | 3000K | Black grey ● | T077730 |
| | | Black green ◉ | T077770 |

| **Driver** | | | | | | |
|---|---|---|---|---|---|---|
| | Vac | $L_{mm}$ | $W_{mm}$ | $H_{mm}$ | | Code |
| 24W CV 24VDC | 110-240 | 185 | 35 | 35 | DALI | **DV1041** |
| 90W CV 24VDC | 110-240 | 250 | 63 | 30 | 0-10 | **DV1075** |
| 90W CV 24VDC | 110-240 | 250 | 63 | 30 | DALI | **DV1076** |
| 25W CV 24VDC | 110-240 | 148 | 40 | 32 | Undimmable | **T409996*** |
| 60W CV 24VDC | 110-240 | 163 | 43 | 32 | Undimmable | **T409998*** |
| 90W CV 24VDC | 110-240 | 161 | 61 | 36 | Undimmable | **T409999*** |

Artemide®

**Headquarters**
**Artemide S.p.A.**
Via Bergamo, 18
20006 Pregnana Milanese (MI), Italy
Tel. +39 02 93518.1
Tel. +39 02 93526.1
Numero verde 800 834 093
(from Italy only)
info@artemide.com
artemide.com

ISO 9001:2015

ISO 14001:2015

ISO 45001:2018

**CTF STAGE2**
**ISO 17025**

Artemide S.p.A.
si riserva la facoltà di modificare, in qualunque momento e senza preavviso, le caratteristiche tecniche degli elementi illustrati nel presente catalogo.

Artemide S.p.A.
reserves the right to change, at any time and without prior warning, the technical specifications of any product illustrated in this catalogue.

Artemide S.p.A.
se réserve le droit de modifier, à n'importe quel moment et sans préavis, les caractéristiques techniques des éléments illustrés dans ce catalogue.

Artemide S.p.A.
behält sich das Recht vor jederzeit und ohne Ankündigung die technischen Daten der im Katalog abgebildetem Produkte zu ändern.

Artemide S.p.A.
se reserva la facultad de modificar, en cualquier y sin aviso previo, las características técnicas de los elementos ilustrados en el presente catálgo.

2026

For information regarding distributors and points of sale, please visit our website artemide.com or email: info@artemide.com